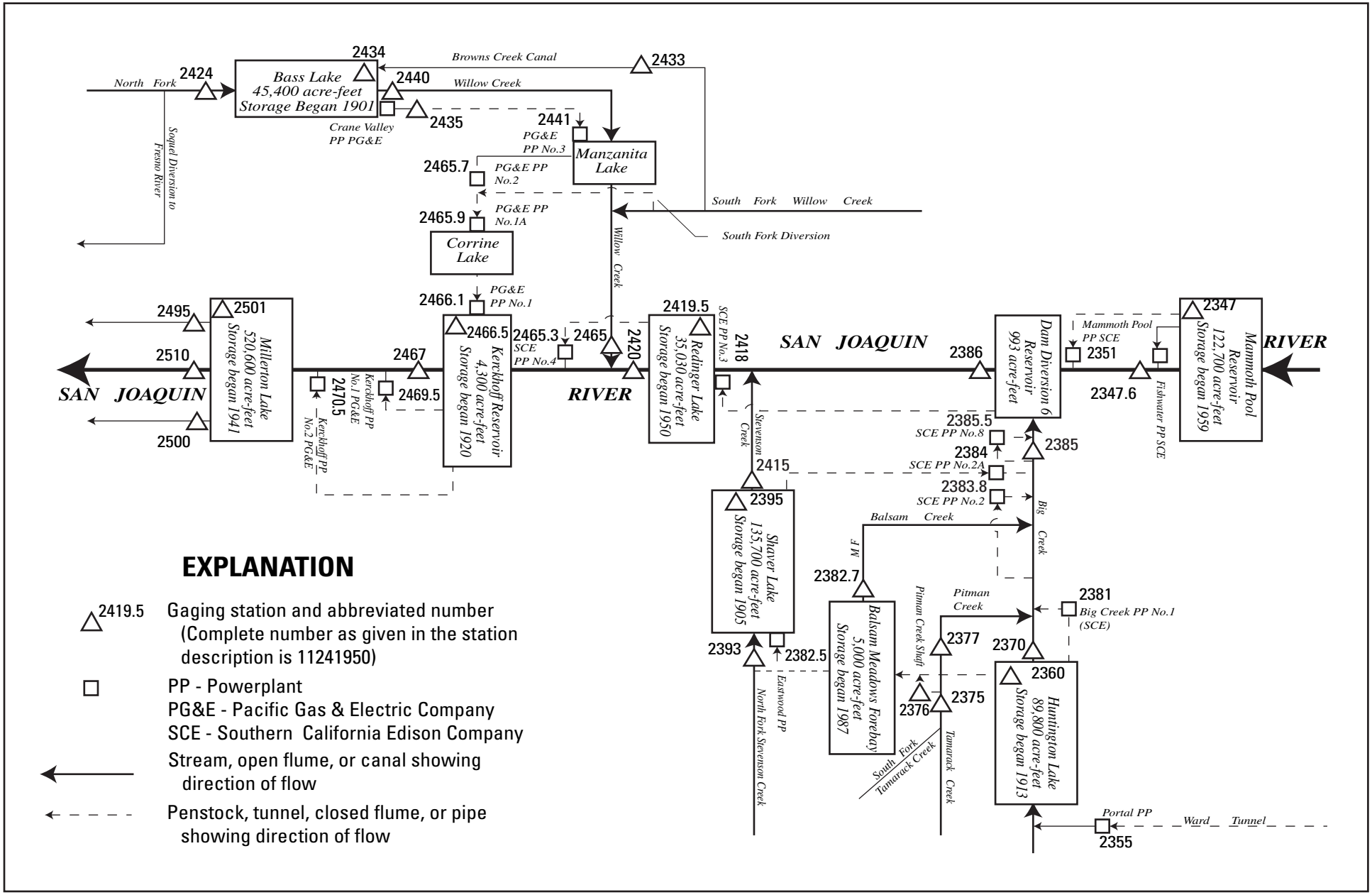

Figure showing diversions and storage in lower San Joaquin River Basin.