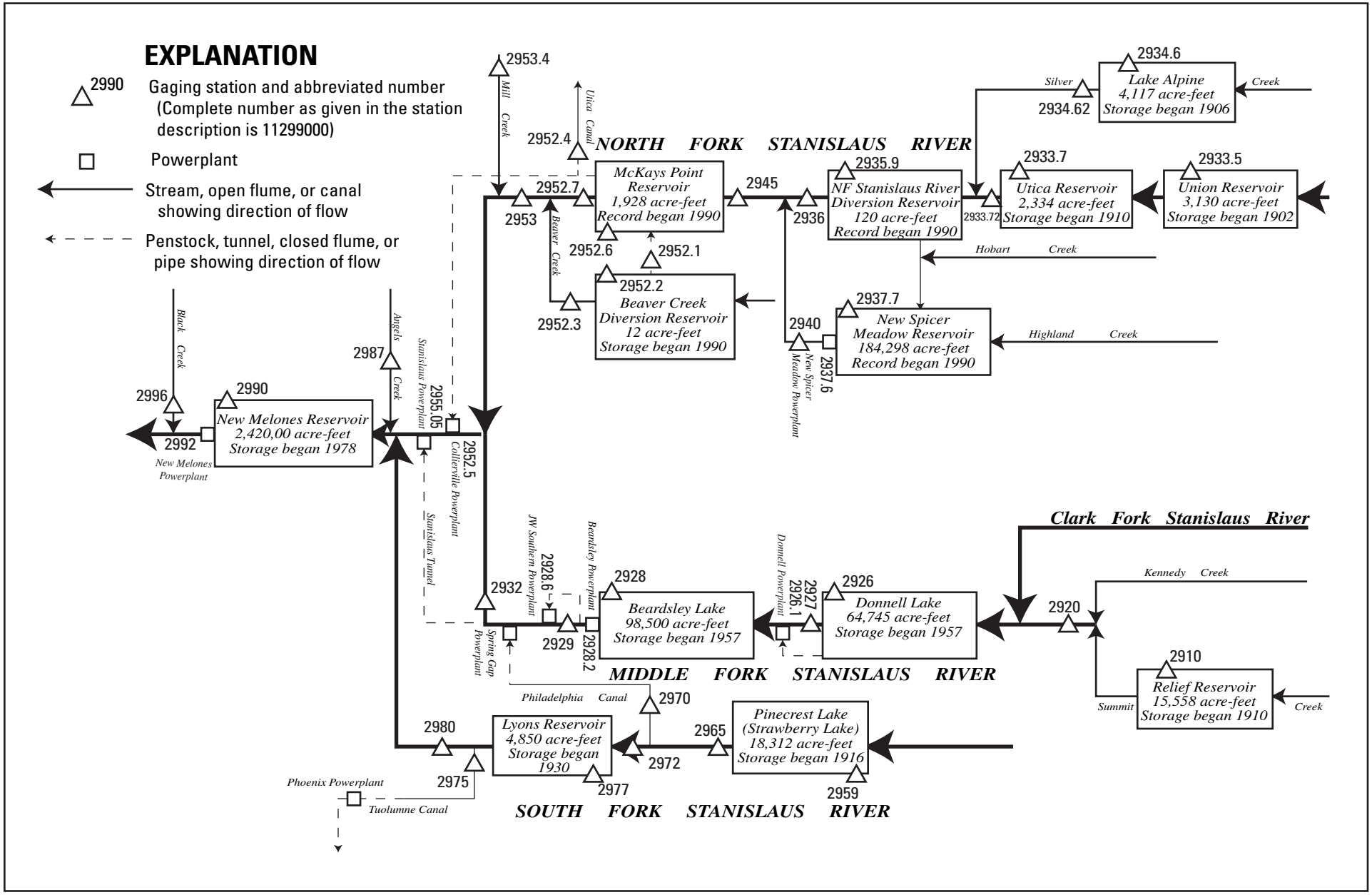

Figure showing diversions and storage in Stanislaus River Basin.